DIESEL MECHANIC

MINING QUALIFICATIONS AUTHORITY

CODE: BRR-2

MOUNT A BEARING MECHANICALLY

Created : 01 February 2003
Revised : March 2015
Owner : Learnership Department

First Published : March 2003
Revision No: 002
TRG 9

INDEX

The following elements are contained in this learning guide:

SOURCE REFERENCES

Bearing display board in the training centre.

Audio-visual aids.

OBJECTIVE

You will be learning towards the outcome “Mount a bearing mechanically”. Whilst learning towards the outcome you will be required to achieve the following:

- Enable you to use pullers to remove bearings, and fit bearings using heating methods.

On completion of this module, the learner must be able to:

- Use different types of pullers to remove bearings.
- Fit bearings, using heating methods.
- Overhaul a bearing assembly.

During this process you must adhere to certain specified requirements as listed in the Module.

ASSESSMENT AND EVALUATION CRITERIA

You will be assessed, when you are confident that you are able to achieve the outcomes as listed, to determine your competence as measured against the required criteria. This assessment will be in line with accepted best practices regarding assessment.

- A practical test and practical test will be set at the end of the module and must be completed without using references.
- The learner will be required to remove a bearing from a shaft with a bearing puller, and refit it using the heating method.

The following standards must be achieved:

- Precautions must be taken to prevent contamination of the bearing.
- The bearing must be correctly removed, without damage to the bearing, shaft or the puller.
- The bearing must be correctly cleaned and inspected for serviceability.
- The procedures for heating and refitting the bearing must be done correctly.

All safety procedures must be adhered to.

Note:

Module BRR-1 is a pre-requisite for this module.

HAZARD IDENTIFICATION AND CONTROL (HIAC) FORM

BRR-2

MOUNT A BEARING MECHANICALLY

STEPS IN OPERATION / PROCESS	POTENTIAL ACCIDENT / INCIDENT	CONTROLS (BY RESPONSIBLE PERSON)
1. Hot mount a bearing.	• Burning injuries when heating and handling hot bearing and oil.	• Wear heat resistant gloves and apron if necessary.
2. Use hand tools.	• Using damaged tools or wrong tools for the job can cause injury and damage to equipment.	• Always use the correct tool for the job. • Ensure tools are in good condition. • Use tools correctly. • Wear appropriate PPE where necessary. • Always take good care of tools. Maintain, clean and store it properly.

NOTE: Before doing the practical work contained in this module, the learner must study the content of the above HIAC form again and then sign the statement below.

The above risks, which will be encountered in this module, are fully understood and will be controlled during the practical work.

Signature of learner: _____

Signature of Training Officer: _____

Date: _____

DICTIONARY

Bearing : A supporting part of a machine that bears the friction, especially between rotating shaft and its housing.

Spindle : A part, which turns round or on which something turns.

Yoke : Bar of soft iron between poles of an electromagnet.

1. USE BEARING PULLERS

ITEM / TASK: Introduction.

DESCRIPTION:

A. It is sometimes impossible even when working in a workshop, to remove a bearing with a press because of the size or shape of the machine. In such case a puller must be used to remove the bearing.

B. Pullers are made with three or two legs fitted to a body (Fig 1), and come in various sizes. The legs on most of the pullers are interchangeable or extendable to allow the jaws to fit over or inside the bearing. Force is exerted on the bearing through the body by means of impact, screw threads or hydraulics.

FIG 1.

C. One way of mounting bearings, especially the larger sizes, is to expand them by heating before mounting.

D. In these notes a description will be given on how to remove bearings with pullers and how to replace them by expansion.

ITEM / TASK: Types of pullers.

DESCRIPTION:

A. Screw pullers:

- Screw pullers have threads in the body and on the spindle.
- By screwing the spindle into the body, the spindle will push against the shaft and create a force that will make the legs pull the bearing off. (Fig 2)
- Screw pullers are suitable for most purposes.

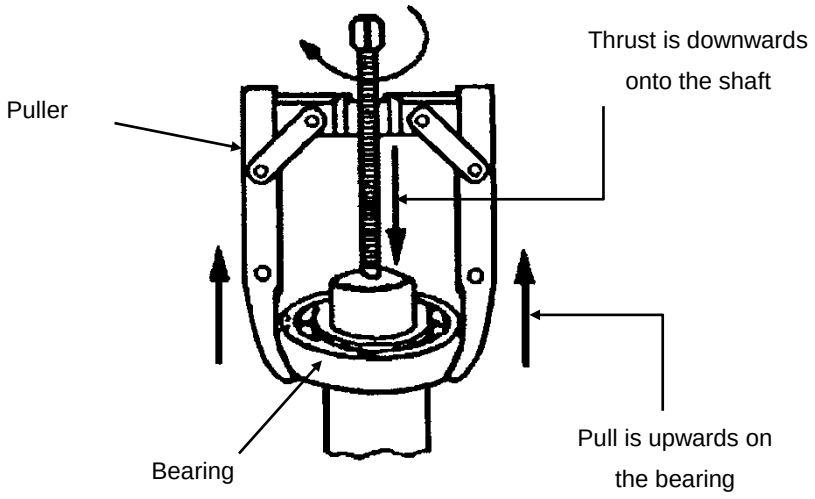

FIG 2.

B. Impact pullers. (See the display board)

- An impact puller is simply a puller body that has a shaft with a stop at one end and with a sliding mass fitted in between.
- By sliding the mass towards the stop at speed, force is applied on the bearing every time on impact. (Fig 3)
- Impact pullers are only suitable for small bearings, i.e. up to an inside diameter of 50mm.

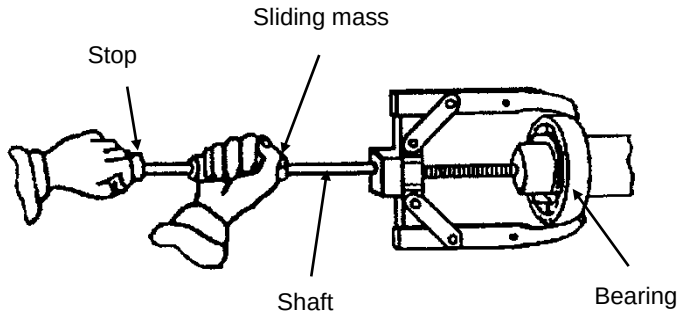

FIG 3.

C. Hydraulic pullers:

- Instead of opposing forces being exerted on the shaft and bearing by screwing the spindle of a screw puller into its body, force is exerted by pumping hydraulic oil into a power pack (Fig 4), to extend a piston / ram to remove the bearing.
- The power pack must be used in conjunction with a pulling attachment and strong-back (See figures 5 and 6). Hydraulic pullers are used when a large force is required.

FIG 4.

D. Pulling attachment:

- Where there is insufficient space behind the bearing for you to hook the jaws directly onto the bearing, an attachment as shown in Fig 5 is used.

FIG 5.

- Open the attachment wide enough to pass over the bearing if the bolts are long enough to allow it, or split the attachment by removing the two bolts.
- Reassemble the two halves of the attachment behind the bearing and screw up the nuts until the two halves support the bearing evenly.

Note : Use attachment correctly with the flat side supporting the inner race of the bearing.

- Hook the jaws of a two-leg puller over the bolts or use a strong-back with two long bolts screwed into the attachment as shown in Fig 6.

FIG 6.

<u>ITEM / TASK</u>: Selecting the right size puller.

<u>DESCRIPTION</u>:

A. The distance between the jaws of a screw puller when it is spread open is called the **spread**. The distance from the bottom of the body to the inside of the jaw is called the **reach**. (Fig 7)

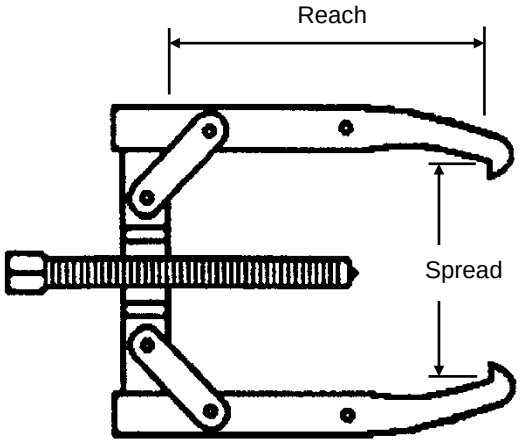

FIG 7.

B. Compare the reach and the spread of the workpiece with that of the pullers and select one with dimensions equal or greater than those of the workpiece.

NB.

Always use a 3-jaw puller where clearance permits it so as to provide greater stability and a more even distribution of the pulling force.

C. Make sure that the diameter of the jacking screw of the puller is at least half the diameter of the bearing shaft.

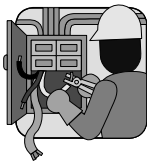

ITEM / TASK: Using bearing pullers.

DESCRIPTION:

A. Select a suitable puller.

B. Arrange the puller inside or outside the bearing as required. If for instance, removing the cup of a taper bearing from the housing, a strong-back must be placed across the bore of the housing to take the pushing force of the screwed spindle. (Fig 8)

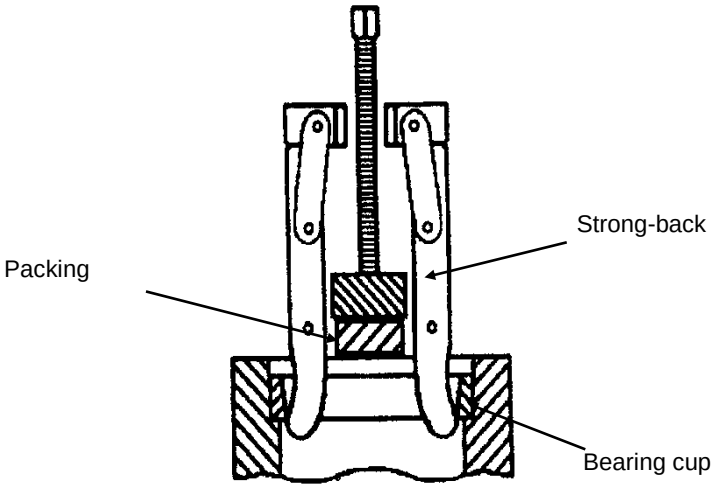

FIG 8.

C. Fit the pulling attachment over the bearing if necessary.

D. Fit the legs of the puller over the bearing or the attachment, whichever is applicable. (Fig 6)

E. Turn the screwed spindle of the puller in until the point of the screw is located into the centre hole of the shaft. Refer back to Fig 2.

F. Check that the puller is square and that the jaws are firmly located.

NB.

Whenever possible, the force of the pull must be on the ring with the interference fit when removing a bearing.

G. Pull the bearing off slowly by using a spanner on the screwed spindle. Stop frequently to check that the bearing puller is still square with the shaft or housing and that the jaws are still firmly located.

NB.
Do not use any extensions on the spanner. A hydraulic puller must be used if the screw puller cannot exert a great enough force to remove the bearing.

DO THE PRACTICE ON THE NEXT PAGE BEFORE CONTINUING WITH THE REST OF THE MODULE.

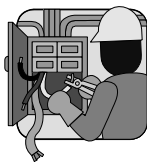

PRACTICE

- Remove a bearing from a shaft with an impact puller.
- Remove a taper roller bearing cup from the housing with a screw puller.
- Remove a bearing from a shaft with a hydraulic puller.

Ask your Training Officer to check your work while you are practising to do the above and ask him to sign below when it is correct and then continue with the next section.

LEARNER	TRAINING OFFICER
DATE :	DATE :
SIGNATURE :	SIGNATURE :

2. HOT MOUNTING A BEARING

ITEM / TASK: Expanding the bearing.

DESCRIPTION:

A. In most cases bearings have a tap-on fit on the shaft. Therefore bearings can be fitted to the shaft by heating it to expand enough to slide over the shaft.

B. Two methods of expanding a bearing are to heat it:

- by induction, or
- in hot oil. (The hot oil method is seldom used)

ITEM / TASK: Induction heating.

DESCRIPTION:

A. Sealed bearings must not be heated in oil. They should be heated magnetically, i.e. by induction heating.

Note: Rubber sealed bearings should not be heated as damage may occur to the seal.

B. The bearing is fitted over the removable laminated (layered) yoke of the induction heater.

C. When the bearing and the removable yoke are in place and the heater is switched on, current flows through the yoke, which in turn induces a low voltage and a high current into the bearing.

D. The bearing actually forms a short circuit and is then heated. (Fig 9)

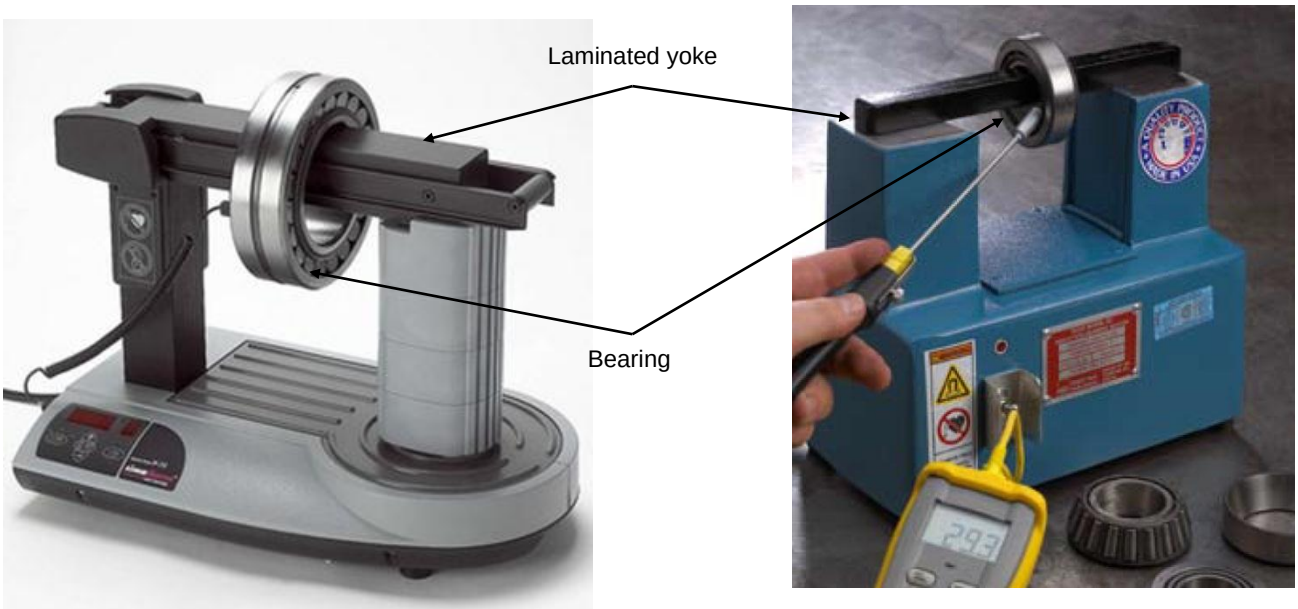

FIG 9.

ITEM / TASK: Installation steps to follow when mounting an induction heated bearing.

DESCRIPTION:

A. Clean the shaft with emery tape.
B. Remove any burrs from the shaft with a smooth file.
C. Measure the diameter of the bearing journal on the shaft with a micrometer.
D. Set a telescopic gauge to the size of the journal.
E. Select the largest yoke that will fit the inside diameter of the bearing to improve heating efficiency and so reduce the heating time.
F. Mount the bearing on the induction heater as shown in Fig 9.
G. Switch the induction heater on and check the temperature of the bearing frequently with a thermometer.

NB.

Be careful that the bearing is **not heated above 100°C.**

H. Remove the bearing from the induction heater after the specified temperature has been reached. Check the expansion in the bore with the telescopic gauge. (Fig 10) Do this quickly before the bearing gets a chance to cool down.

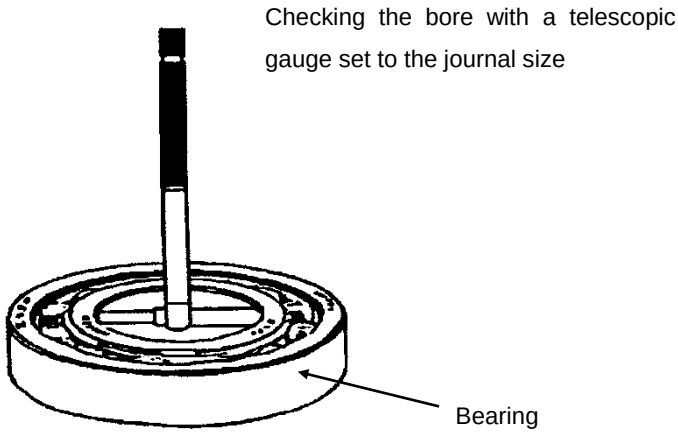

FIG 10.

NB.

Wear heat resistant gloves when handling the hot bearing.

I. If the telescopic gauge fails to fit inside the bearing bore, reheat bearing to the specified temperature.
J. Remove the bearing from the heater and slide it over the shaft.
K. Hold the bearing in place against the shoulder until it has cooled down enough to shrink on. (Fig 11) Compressed air can be used to cool the bearing down faster.

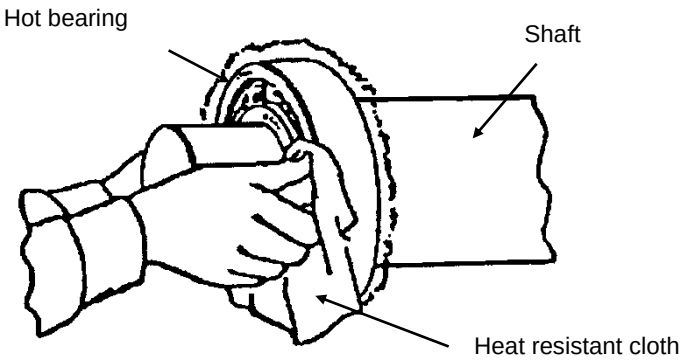

FIG 11.

L. Try to insert a 0.05mm feeler between the bearing and the shoulder after the parts have cooled to ensure that the bearing is fully seated. (Fig 12)

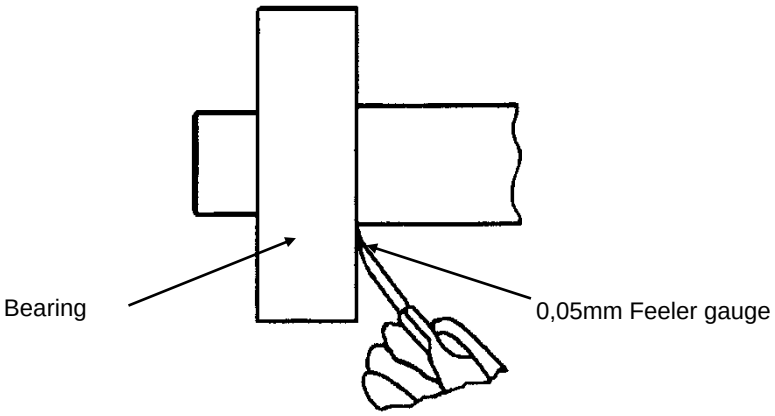

FIG 12.

DO THE PRACTICE ON THE NEXT PAGE BEFORE CONTINUING WITH THE REST OF THE MODULE.

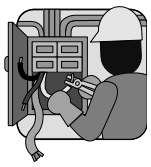

PRACTICE

Fit a bearing onto a shaft by heating it using the induction heater.

Ask your Training Officer to check your work and to sign below when it is correct and then continue with the next section.

LEARNER	TRAINING OFFICER
DATE :	DATE :
SIGNATURE :	SIGNATURE :

ITEM / TASK: Heating a bearing in oil.

DESCRIPTION:

A. The bearing must be supported on two parallel metal bars to prevent it from coming into direct contact with the bottom of the container. (Fig 13) The container is filled with oil and safely heated by means of a hot plate.

FIG 13.

B. Direct contact of the bearing with the bottom of the container will prevent an even distribution of the heat through the oil and could cause bearing damage.
C. The oil must be heated to between 95°C to 100°C and the temperature must be checked frequently with a thermometer to prevent heating the bearing above 100°.

ITEM / TASK: Installation steps to follow when mounting oil heated bearing.

DESCRIPTION:

A. Clean the container.
B. Place the two supports at the bottom of the container. (Fig 13)
C. Pour the recommended oil into the container so that it will cover the bearing.
D. Remove the bearing from its oil wrapping paper.
E. Tie a piece of copper wire to the outer ring of the bearing before it is placed in the container, so that it can be easily lifted out of the heated oil.
F. Place the bearing on top of the two supports in the container and heat the oil.
G. Clean the shaft with emery tape.

H. Remove any burrs from the shaft with a smooth file.
I. Measure the diameter of the bearing journal on the shaft with a micrometer.
J. Set a telescopic gauge to the size of the journal.
K. Check the temperature of the oil frequently.
L. Leave the bearings in the oil until the bearing has reached the desired temperature.
M. Remove the bearing from the oil and check its bore with the telescopic gauge as shown in Fig 10.

NB.

Do this quickly before the bearing cools down.

N. If the telescopic gauge fails to fit inside the bearing bore, reheat bearing to the specified temperature.
O. Remove the bearing from the oil and slide it onto the shaft.
P. Hold the bearing against the shoulder until it has cooled down enough to shrink on as shown in Fig 11. Compressed air can be used to cool the bearing down faster.
Q. Try to insert a 0.05mm feeler gauge between the bearing and the shoulder of the shaft to ensure that it is properly seated. See Figure 12.

NB.

Bearings with nylon cages and seals cannot be heated in oil because the nylon and the grease will melt.

POTENTIAL HAZARD!

Heated oil may cause serious burns. Be very careful!

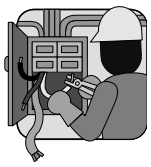

PRACTICE - (OPTIONAL)

Take the bearing, which you have removed from the shaft previously. Heat the bearing in oil and fit it to the shaft again.

As your Training Officer to sign you off when you have completed the task correctly and achieved the required standards, then go on to the next section.

LEARNER	TRAINING OFFICER
DATE :	DATE :
SIGNATURE :	SIGNATURE :

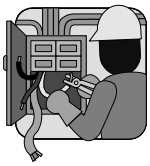

3. OVERHAUL A BEARING ASSEMBLY

ITEM / TASK: Steps for overhauling a bearing assembly.

DESCRIPTION:

A. Remove the surface dirt from the plumber blocks and the shaft.

B. Select the appropriate tools and make sure they are clean.

C. Clean your hands.

D. Mark the plumber blocks on the cap and the bottom half. (Fig14)

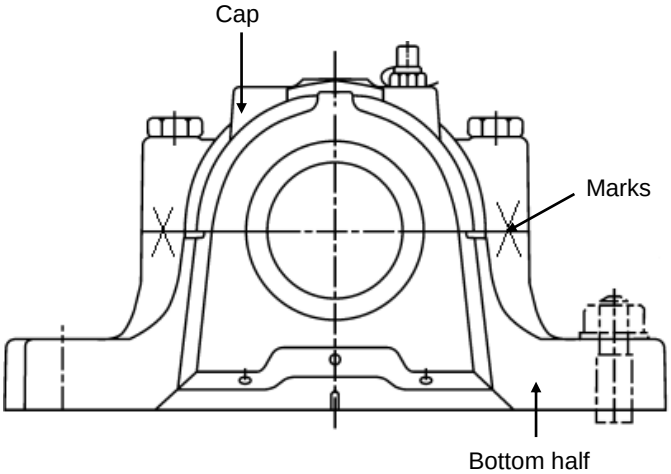

FIG 14.

E. Remove the nuts.

F. Lift off the caps.

G. Lift the shaft out of the plumber block.

H. Remove the bearings from the shaft with a bearing puller.

I. Clean the bearings.

J. Inspect the bearings and record your findings on the standard bearing checklist.

Note:

A standard bearing checklist is included at the end of the module.

K. Replace the bearings on the shaft by using the induction heating method.

NB:

Remember when a bearing is to be fitted to a shaft, it must not be removed from its oil wrapping paper before you are ready to fit it. This will prevent it from becoming contaminated.

L. Wipe the inside of the plumber blocks with a cloth and remove any dirt.
M. Replace the shaft assembly into the plumber blocks.
N. Replace the plumber block caps. Make sure that the marks correspond. This ensures that the correct cap goes onto the correct bottom halves.
O. Replace the nuts and tighten them.
P. Check if the shaft runs free.

NB.

To prevent wastage of lubricants you will not be required to pack the bearings in this module.

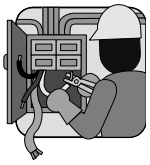

PRACTICE

Remove and replace the bearings of the shaft assembly provided.

Ask your Training Officer to check your work while you are practising the above and ask him to sign you off if your work is correct.

LEARNER	TRAINING OFFICER
DATE :	DATE :
SIGNATURE :	SIGNATURE :

REMEMBER ALWAYS WORK SAFE

Once you have passed the entire practice, you are now at liberty to request a Formative Assessment from your Assessor.

STANDARD BEARING CHECKLIST.

Bearing type (Identification) : _____

CHECK FOR :	YES	NO
Bearing rusty.		
Bearing discoloured.		
Bearing fractured.		
Bearing cracked.		
Bearing pitted.		
Bearing flaking.		
Bearing brinelling.		
Bearing scratched.		
Lack of lubrication.		
Seals damaged.		
Cage damaged.		
Bearing loose in housing.		
Housing worn.		
Bearing loose on shaft.		
Shaft worn.		
* Bearing overheating.		
* Bearing vibration.		
BEARING ACCEPTABLE		

* For in service inspection only.

REASONS FOR BEARING NOT ACCEPTABLE.

_____

_____

_____

_____

_____

STANDARD BEARING CHECKLIST.

Bearing type (Identification) : _____

CHECK FOR :	YES	NO
Bearing rusty.		
Bearing discoloured.		
Bearing fractured.		
Bearing cracked.		
Bearing pitted.		
Bearing flaking.		
Bearing brinelling.		
Bearing scratched.		
Lack of lubrication.		
Seals damaged.		
Cage damaged.		
Bearing loose in housing.		
Housing worn.		
Bearing loose on shaft.		
Shaft worn.		
* Bearing overheating.		
* Bearing vibration.		
BEARING ACCEPTABLE		

* For in service inspection only.

REASONS FOR BEARING NOT ACCEPTABLE.

_____

_____

_____

_____

_____

STANDARD BEARING CHECKLIST.

Bearing type (Identification) : _____

CHECK FOR :	YES	NO
Bearing rusty.		
Bearing discoloured.		
Bearing fractured.		
Bearing cracked.		
Bearing pitted.		
Bearing flaking.		
Bearing brinelling.		
Bearing scratched.		
Lack of lubrication.		
Seals damaged.		
Cage damaged.		
Bearing loose in housing.		
Housing worn.		
Bearing loose on shaft.		
Shaft worn.		
* Bearing overheating.		
* Bearing vibration.		
BEARING ACCEPTABLE		

* For in service inspection only.

REASONS FOR BEARING NOT ACCEPTABLE.

_____

_____

_____

_____

_____

STANDARD BEARING CHECKLIST.

Bearing type (Identification) : _____

CHECK FOR :	YES	NO
Bearing rusty.		
Bearing discoloured.		
Bearing fractured.		
Bearing cracked.		
Bearing pitted.		
Bearing flaking.		
Bearing brinelling.		
Bearing scratched.		
Lack of lubrication.		
Seals damaged.		
Cage damaged.		
Bearing loose in housing.		
Housing worn.		
Bearing loose on shaft.		
Shaft worn.		
* Bearing overheating.		
* Bearing vibration.		
BEARING ACCEPTABLE		

* For in service inspection only.

REASONS FOR BEARING NOT ACCEPTABLE.

_____

_____

_____

_____

_____